Atomic Physics with Accelerators: Projectile Electron Spectroscopy (APAPES)

2015 J. Phys.: Conf. Ser. 583 012014

(http://iopscience.iop.org/1742-6596/583/1/012014)

Atomic Physics with Accelerators: Projectile Electron Spectroscopy (APAPES)*

I Madesis[1,2], A Dimitriou[1,2], A Laoutaris[3], A Lagoyannis[2], M Axiotis[2], T Mertzimekis[2,4], M Andrianis[2], S Harissopulos[2], E P Benis[5], B Sulik[6], I Valastyán[6] and T J M Zouros[1,2]

[1]Department of Physics, University of Crete, P.O Box 2208, GR 71003 Heraklion, Greece

[2]Tandem Accelerator Laboratory, INP, NCSR Demokritos, GR 15310 Ag Paraskevi, Greece

[3]Department of Physics, School of Applied Sciences, National Technical University of Athens, GR 15780 Zografou, Athens, Greece

[4]Department of Physics, University of Athens, Zografou Campus, GR 15784 Athens, Greece

[5]Department of Physics, University of Ioannina GR 45110, Ioannina, Greece

[6]Institute for Nuclear Research (MTA ATOMKI), Bem tér 18/c, H 4026 Debrecen, Hungary

E-mail: adimitr@physics.uoc.gr

Abstract. The new research initiative APAPES (http://apapes.physics.uoc.gr/) has already established a new experimental station with a beam line dedicated for atomic collisions physics research, at the 5 MV TANDEM accelerator of the National Research Centre "Demokritos" in Athens, Greece. A complete zero-degree Auger projectile spectroscopy (ZAPS) apparatus has been put together to perform high resolution studies of electrons emitted in ion-atom collisions. A single stage hemispherical spectrometer with a 2-dimensional Position Sensitive Detector (PSD) combined with a doubly-differentially pumped gas target will be used to perform a systematic isoelectronic investigation of K-Auger spectra emitted from collisions of pre-excited and ground state He-like ions with gas targets using novel techniques. Our intention is to provide a more thorough understanding of cascade feeding of the 1s2s2p ^{4}P metastable states produced by electron capture in collisions of He-like ions with gas targets and further elucidate their role in the non-statistical production of excited three-electron 1s2s2p states by electron capture, recently a field of conflicting interpretations awaiting further resolution. At the moment, the apparatus is being completed and the spectrometer will soon be fully operational. Here we present the project progress and the recent high resolution spectrum obtained in collisions of 12 MeV C^{4+} on a Neon gas target.

1. Introduction

The APAPES initiative establishes in Greece the discipline of Atomic Physics with Accelerators, a field with important contributions to fusion, hot plasmas, astrophysics, accelerator technology and basic atomic physics of ion-atom collision dynamics, structure and technology. This is being accomplished by combining the existing interdisciplinary atomic collisions expertise from three Greek universities, the strong support of distinguished foreign researchers and the high technical ion-beam know-how of the Demokritos Tandem accelerator group into a cohesive initiative.

2. Experimental setup

The new experimental setup includes a single stage hemispherical spectrometer with injection lens and 2-dimensional PSD combined with a doubly-differentially pumped gas target. It has been used in previous work at Kansas State Univ. [1], but recently moved to the Athens Tandem. This high-efficiency, high-resolution ZAPS system is ideally suited for use in the electron spectroscopy of weak ion beams such as the ones called for in this work and due to its PSD is also about 15-20 times more efficient than conventional single channel devices (e.g. two-stage parallel plate electron spectrometers [2]). Additionally, the paracentric entry of the Hemispherical Deflector Analyser (HDA) [3] is a novel feature adding further high resolution capability not available to conventional centric HDAs [4, 5]. In the two following pictures we give a general presentation of the experimental setup. In figure 1 a panoramic view of the beam line is shown and in figure 2 the doubly differentially pumped target gas cell, the HDA, the 4-element input lens and the PSD are shown inside the vacuum chamber.

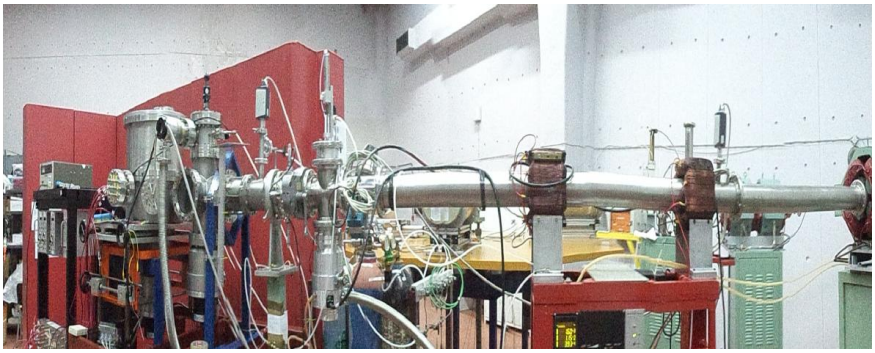

Figure 1. Panoramic view of the new beam line at the 5 MV Demokritos Tandem.

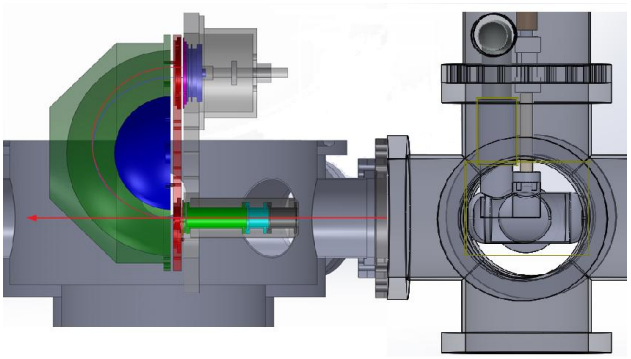

Figure 2. From right to left: The doubly-differentially pumped target gas cell, the 4-element input lens, the HDA and the 2-D PSD. Each colour denotes a different voltage.

3. Electron capture

The various 1s2s2*l* lines observed in the Auger spectra result from the capture of a target electron to one of the possible (1*s*2s2*l*) states. With the use of the well known COWAN Hartree-Fock package [6] the relevant F^{6+}(1s2s*nl* $^{2,4}L_J$) Li-like energy levels, including dipole and Auger transition rates for principal quantum numbers $2 \leq n \leq 5$ and l=0, n-1 were calculated [7]. In figure 3 the energy level scheme along with the corresponding transition rates is shown. Basic quantum mechanics requires the spin coupling of a 2p electron to the 1s2s ^{3}S state yielding 1s2s2p ^{4}P quartet and 1s2s2p ^{2}P doublet states to be in the ratio of 2:1, i.e. R=σ(1s2s2p ^{4}P)/σ(1s2s2p ^{2}P) = 2. However, it has been documented in the literature that the values of R extracted from the spectra are much larger having values of R~6-9 [7-10]. Our intention is to provide a more thorough understanding of cascade feeding of the 1s2s2p ^{4}P metastable states produced by electron capture in collisions of He-like ions with gas targets and further elucidate their role in the non-statistical production of excited three-electron 1s2s2p states by electron capture, recently a field of conflicting interpretations awaiting further resolution.

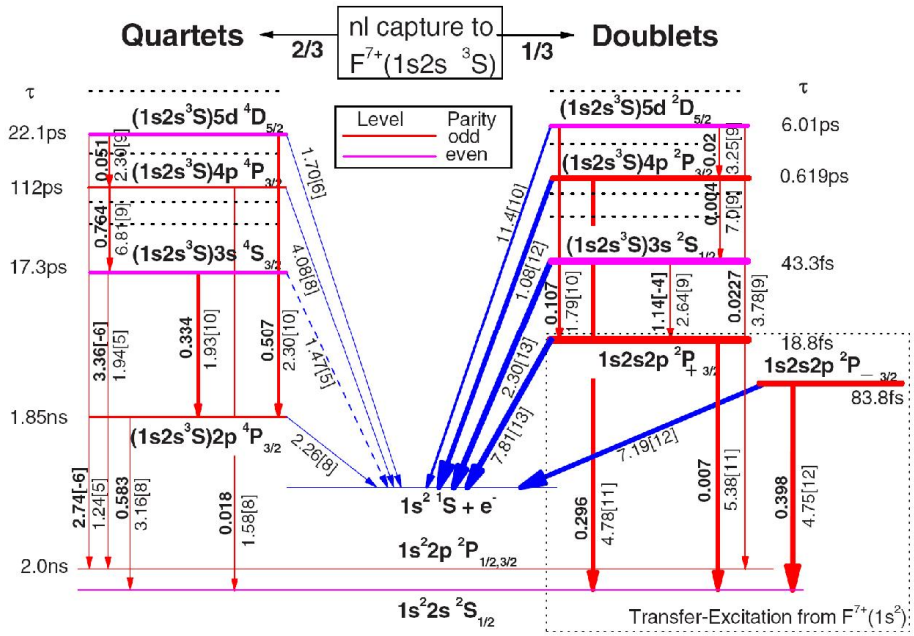

Figure 3. Li-like quartet and doublet F^{6+} 1s2s*nl* energy level scheme (not to scale) resulting from single electron *nl* capture to F^{7+} 1s2s ^{3}S. Only a few representative levels are indicated for clarity. Arrows represent transitions with widths roughly proportional to their strength radiative *E*1 (dipole) vertical red lines and Auger slanted blue lines. Rates in s^{-1} are given to the right of the arrows the quantity in square brackets indicates power of 10, while radiative transition branching ratios are given in bold to their left. Also indicated are total lifetimes and dashed arrows for Coulomb forbidden transitions (from Ref. [7]).

4. Electron Energy spectrum

Our first high resolution Auger spectrum was obtained recently with our new setup using the 5 MV tandem Van der Graf accelerator and is shown in figure 4. A 12 MeV C^{4+} beam was collimated and directed into the doubly-differentially pumped gas cell that contains gaseous neon target. The gas cell pressure during the measurement was 20 mTorr. The tuning energy W of the analyzer was set at 1525 eV. High resolution was achieved by retarding the electrons using a deceleration factor of F=4. Analysed electrons were counted and normalized to the incident beam current, which was collected at the Faraday cup. The similarity with previous published works is obvious [9].

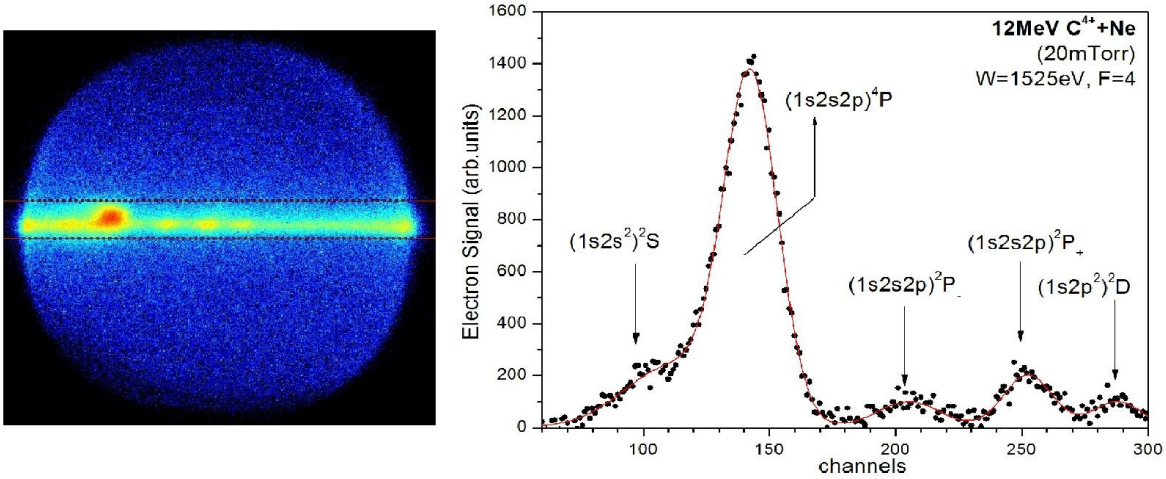

Figure 4. (a) 2-D PSD Image, (b) Projection of the PSD image within the selected region shown in (a). The ^{4}P line is seen to be broadened. Its considerable longer life time makes it decays closer to the spectrometer with increased angular acceptance and therefore kinematic broadening.

5. Future developments

Future developments on the beam line include the upgrade of the Tandem accelerator to also include a recirculating gas stripper in the accelerator terminal, along with a post-stripping stage, for both gas and foil stripping. These, along with the placement of a number of beam profile monitors will allow for better control of the beam both as to its transmission as well as to its composition of the excited states.

6. Acknowledgements

Co-financed by the European Union (European Social Fund—ESF) and Greek national funds through the Operational Program "Education and Lifelong Learning" of the National Strategic Reference Framework (NSRF)—Research Funding Program: THALES. Investing in knowledge society through the European Social Fund (Grant No. MIS 377289).

7. References

[1] Benis E P, Zaharakis K, Voultsidou M M, Zouros T J M, Stockli M, Richard P, Hagmann S 1998 *Nucl. Instrum. & Meth. Phys. Res.* B **146** 120-125.
[2] Benis E P and Zouros T J M and Richard P 1999 *Nucl. Instrum. Meth. Phys. Res*. B **154** 276
[3] Benis E P and Zouros T J M 2000 *Nucl. Instrum. Meth. Phys. Res*. A **440** 462-465.
[4] Sise O, Dogan M, Martinez G and Zouros T J M 2010 *J. Electron Spectroscopy and Related Phenomena* **177** 42
[5] Cowan R D 1981 The theory of Atomic structure and Spectra (*University of California Press, Berkeley CA*)
[6] Dogan M, Ulu M, Gennarakis G G and Zouros T J M 2013 *Rev. Scient. Instrum.* **84** 043105
[7] Zouros T J M, Sulik B, Gulyás L and Tökési K 2008 *Phys. Rev. A* **77** 050701R
[8] Rohrbein D, Kirchner T and Fritzsche S 2010 *Phys. Rev. A* **81** 042701
[9] Strohschein D, Röhrbein D, Kirchner T, Fritzsche S, Baran J and Tanis J A 2008 *Phys. Rev. A* **77** 022706
[10] Tanis J A, Landers A L, Pole D J, Alnaser A S, Hossain S, and Kirchner T 2004 *Phys. Rev. Lett.* **92** 133201