ATOMIC PHYSICS with ACCELERATORS: PROJECTILE ELECTRON SPECTROSCOPY (http://apapes.physics.uoc.gr)

I.Madesis[1,2]*, A.Dimitriou[1,2], A.Lagoyannis[2], M.Axiotis[2], T.J.Mertzimekis[2,3], M.Andrianis[2], E.P. Benis[4], S.Harissopulos[2], B.Sulik[5], I. Valastyán[5], T.J.M. Zouros[1,2]

(1)Department of Physics, University of Crete, P.O Box 2208, Herakleion GR-71003 , Greece
(2)Tandem Lab, INPP, NCSR Demokritos, P.O Box 60228, Aghia Paraskevi GR-15310 , Greece
(3)Department of Physics, University of Athens, Zografou Campus, Athens GR-15701 , Greece
(4)Department of Physics, University of Ioannina, P.O Box 1186, Ioannina GR-45110, Greece
(5)Institute for Nuclear Research , MTA ATOMKI, Bem tér 18/c, Debrecen H-4026 , Hungary

Abstract

The new research initiative APAPES (http://apapes.physics.uoc.gr/) funded by THALES* is presently setting up a new experimental station at the 5.5MV TANDEM of the National Research Center "Demokritos" in Athens with a dedicated beam line for atomic collisions physics research. A complete zero-degree Auger projectile spectroscopy apparatus is being put together to perform high resolution studies of electrons emitted in ion-atom collisions.

A single stage hemispherical spectrometer with a 2-dimensional position sensitive detector combined with a doubly-differentially pumped gas target will be used to perform a systematic isoelectronic investigation of K-Auger spectra emitted from collisions of pre-excited and ground state He-like ions with gas targets using novel techniques. The goal is to provide a more thorough understanding of cascade feeding of the 1s2s2p ^{4}P metastable states produced by electron capture in collisions of He-like ions with gas targets and further elucidate their role in the non-statistical production of excited three-electron 1s2s2p states, recently a field of conflicting interpretations awaiting further resolution[1].

First beam tests of the apparatus will soon be completed and the spectrometer is expected to become fully operational by the end of Aug 2014. Here, we report on the status of the APAPES project, the description of the beam line, the spectrometer and data acquisition system as well as our plans for the future.

The APAPES research initiative will establish the new (for Greece) discipline of Atomic Physics with Accelerators, a strong field in the EU with important contributions to fusion, hot plasmas, astrophysics, accelerator technology and basic atomic physics of ion-atom collision dynamics, structure and technology. This will be accomplished by combining the existing interdisciplinary atomic collisions expertise from three Greek universities, the strong support of distinguished foreign researchers and the high technical ion-beam know-how of the DEMOKRITOS TANDEM group into a cohesive initiative.

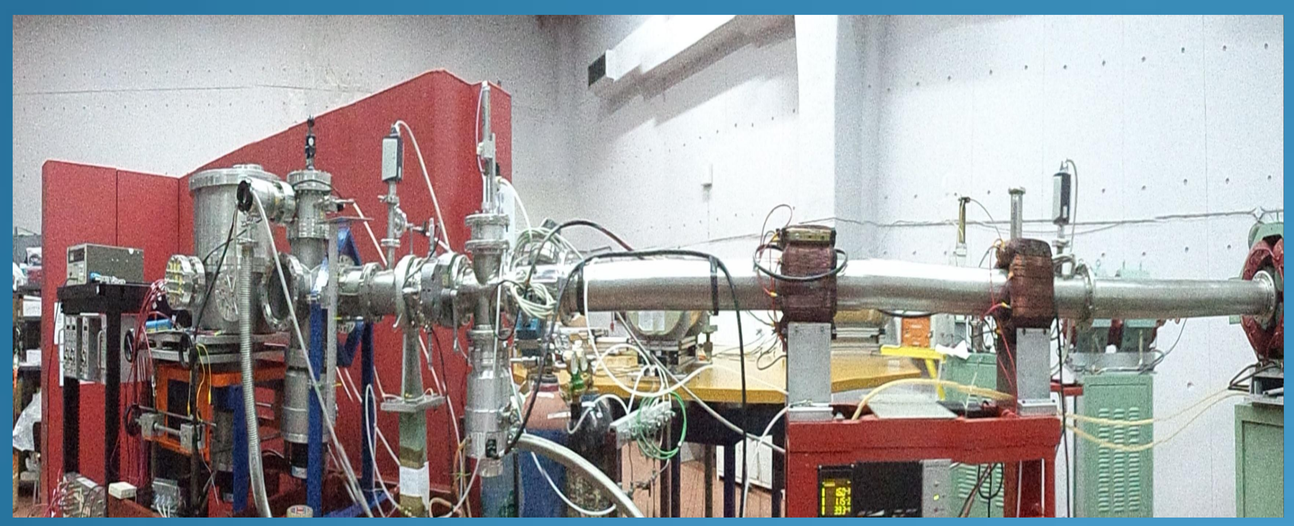

Fig.1 - Panoramic view of the beamline

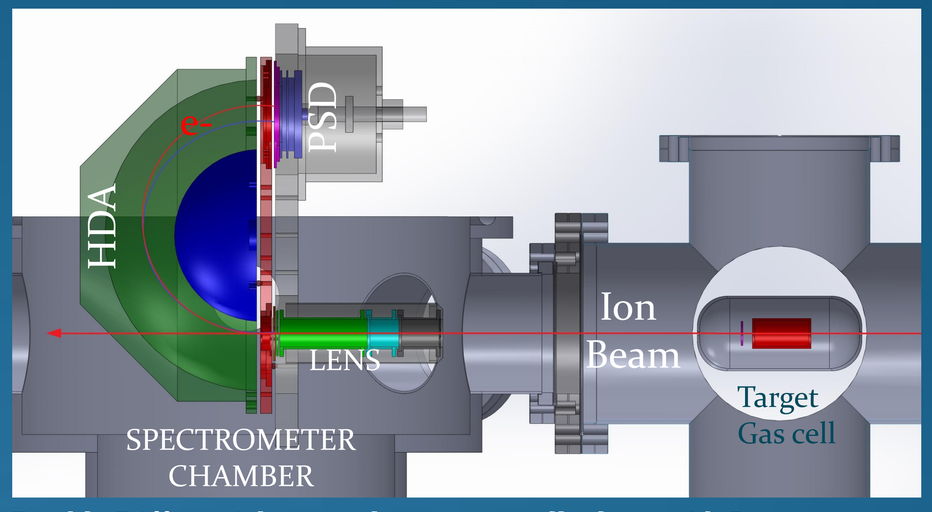

Fig.2 Double Differential pumped target gas cell, along with Paracentric Hemispherical Deflector Analyser (HDA) with 4-element input lens and 2-D Position Sensitive Detector (PSD). Each color denotes a different voltage.

This high efficiency high resolution ZAPS system is ideally suited for use in the electron spectroscopy of weak ion beams such as the ones called for in this proposal. Additionally, the paracentric entry of the HDA is a novel feature adding further high resolution capability not available to conventional centric HDAs [3].

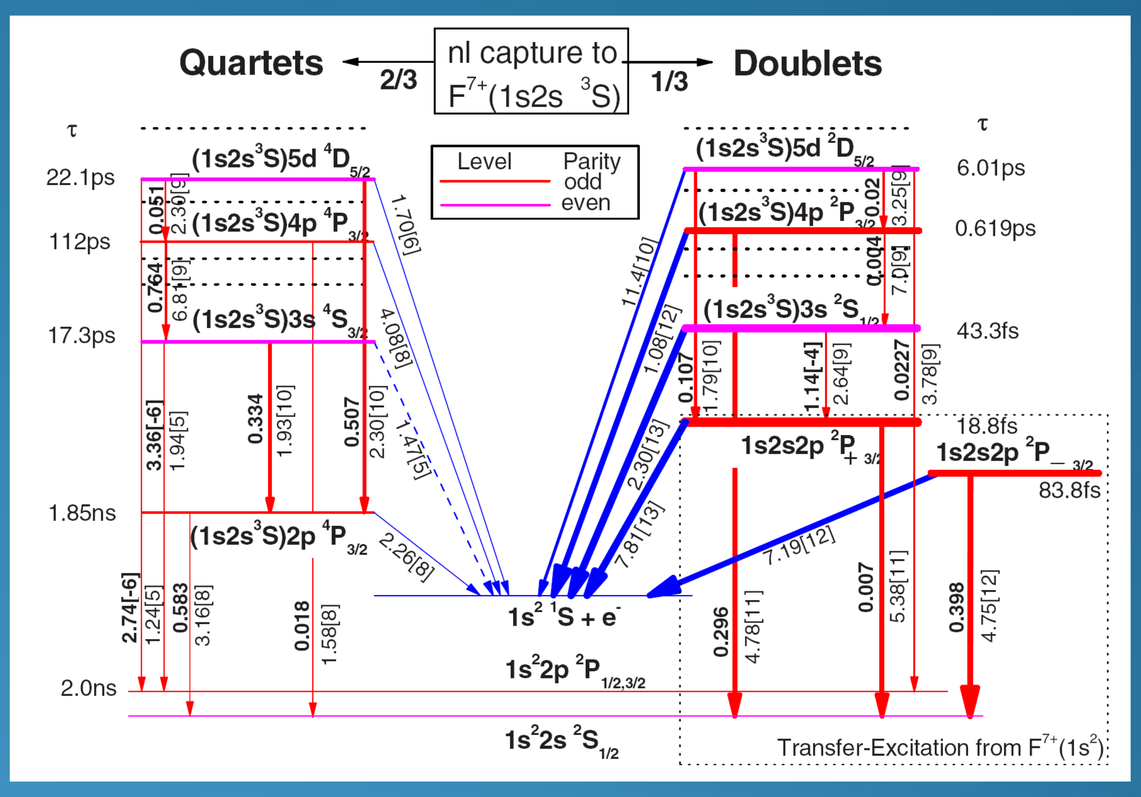

Fig.3 Li-like quartet and doublet F^{6+}1s2*snl* energy level scheme (not to scale) resulting from single electron *nl* capture to F^{7+} 1s2s ^3S. Only a few representative levels are indicated for clarity. Arrows represent transitions with widths roughly proportional to their strength radiative *E*1 vertical red lines and Auger slanted blue lines. Rates in s^{-1} are given to the right of the arrows the quantity in square brackets indicates power of 10, while radiative transition branching ratios are given in bold to their left. Also indicated are total lifetimes and dashed arrows for Coulomb forbidden transitions (from Ref. 1).

The various 1s2s2l lines observed in the Auger spectra must result from the capture of a target electron to one of the possible (1s2s2l) states. Basic quantum mechanics requires the spin coupling of a 2p electron to the 1s2s ^{3}S state to yield 1s2s2p ^{4}P quartet and 1s2s2p ^{2}P doublet states in the ratio 2 to 1 or R=σ(1s2s2p ^{4}P)/σ(1s2s2p ^{2}P)=2. However, the values of R extracted from the spectra are much larger with R~6-9.

Open Postdoc Position

A Postdoctoral researcher position is available in the APAPES project. See http://apapes.physics.uoc.gr/ for further information.

REFERENCES

[1]T. J. M. Zouros, B. Sulik, L. Gulyás and K. Tökési, *Selective enhancement of 1s2s2p ^4P_J metastable states populated by cascades in single-electron transfer collisions of F^{7+}(1s^2/1s2s ^{3}S) ions with He and H_2 targets*, Phys. Rev. A 77 (2008) 050701R.

[2]E. P. Benis and T. J. M. Zouros and P. Richard, Nucl. Instrum. Meth. Phys. Res. B154 (1999) 276.

[3]Omer Sise, Mevlut Dogan, Genoveva Martinez, Theo J. M. Zouros, J. Electron Spectroscopy and Related Phenomena 177 (2010) 42.

[4]D. Strohschein, D. Röhrbein, T. Kirchner, S. Fritzsche, J. Baran, and J. A. Tanis, Phys. Rev. A 77, (2008) 022706.

* E-mail: imadesis@physics.uoc.gr

Ευρωπαϊκή Ένωση
Ευρωπαϊκό Κοινωνικό Ταμείο
ΕΠΙΧΕΙΡΗΣΙΑΚΟ ΠΡΟΓΡΑΜΜΑ
ΕΚΠΑΙΔΕΥΣΗ ΚΑΙ ΔΙΑ ΒΙΟΥ ΜΑΘΗΣΗ
επένδυση στην κοινωνία της γνώσης
ΥΠΟΥΡΓΕΙΟ ΠΑΙΔΕΙΑΣ & ΘΡΗΣΚΕΥΜΑΤΩΝ, ΠΟΛΙΤΙΣΜΟΥ & ΑΘΛΗΤΙΣΜΟΥ
ΕΙΔΙΚΗ ΥΠΗΡΕΣΙΑ ΔΙΑΧΕΙΡΙΣΗΣ
Με τη συγχρηματοδότηση της Ελλάδας και της Ευρωπαϊκής Ένωσης
ΕΣΠΑ 2007-2013
πρόγραμμα για την ανάπτυξη
ΕΥΡΩΠΑΪΚΟ ΚΟΙΝΩΝΙΚΟ ΤΑΜΕΙΟ

Acknowledgement

Co-financed by the European Union (European Social Fund—ESF) and Greek national funds through the Operational Program "Education and Lifelong Learning" of the National Strategic Reference Framework (NSRF)—Research Funding Program: THALES. Investing in knowledge society through the European Social Fund (Grant No. MIS 377289)